# MG300HF12TLC2

RoHS COMPLIANT

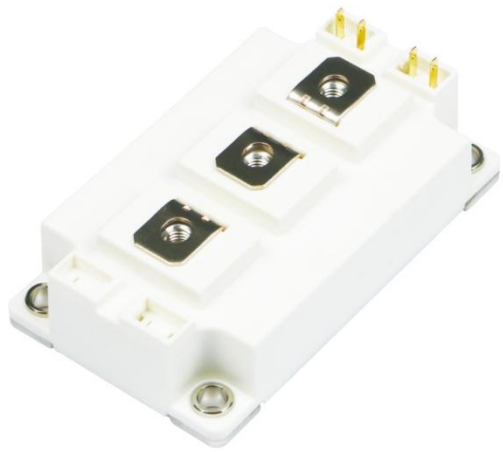

## IGBT Modules

| | |
|---|---|
| $V_{CES}$ | 1200V |
| $I_C$ | 300A |

## Applications

- Inverter for motor drive
- AC and DC servo drive amplifier
- UPS (Uninterruptible Power Supplies)
- Soft switching welding machine

**Circuit**

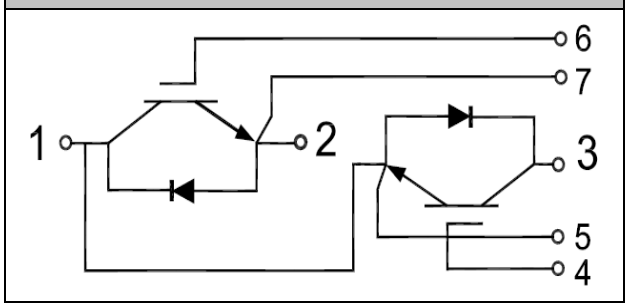


## Features

- Low $V_{CE(sat)}$ with Trench technology
- $V_{ce(sat)}$ with positive temperature coefficient
- High short circuit capability(10us)
- Including ultra fast & soft recovery anti-parallel FWD
- Low inductance
- Maximum junction temperature 175℃

## IGBT

**Absolute Maximum Ratings**

| Parameter | Symbol | Conditions | Value | Unit |
|---|---|---|---|---|
| Collector-Emitter Voltage | $V_{CES}$ | $V_{GE}$=0V, $I_C$=1mA, $T_{vj}$=25℃ | 1200 | V |
| Continuous Collector Current | $I_C$ | $T_C$=100℃ | 300 | A |
| Repetitive Peak Collector Current | $I_{CRM}$ | $t_p$=1ms | 600 | A |
| Gate-Emitter Voltage | $V_{GES}$ | $T_{vj}$=25℃ | ±20 | V |
| Total Power Dissipation | $P_{tot}$ | $T_C$=25℃<br>$T_{vjmax}$=175℃ | 1600 | W |

**Characteristic Values**

| Parameter | Symbol | Conditions | Value | | | Unit |
|---|---|---|---|---|---|---|
| | | | Min. | Typ. | Max. | |
| Gate-Emitter Threshold Voltage | $V_{GE(th)}$ | $V_{GE}=V_{CE}$, $I_C$=8mA, $T_{vj}$=25℃ | 5.2 | 5.8 | 6.4 | V |
| Collector-Emitter Cut-off Current | $I_{CES}$ | $V_{CE}$=1200V, $V_{GE}$=0V, $T_{vj}$=25℃ | | | 1.0 | mA |
| Collector-Emitter Saturation Voltage | $V_{CE(sat)}$ | $I_C$=300A, $V_{GE}$=15V, $T_{vj}$=25℃ | | 1.90 | 2.20 | V |
| | | $I_C$=300A, $V_{GE}$=15V, $T_{vj}$=125℃ | | 2.20 | | |
| | | $I_C$=300A, $V_{GE}$=15V, $T_{vj}$=150℃ | | 2.30 | | |
| Gate Charge | $Q_G$ | | | 2.6 | | uC |
| Internal Gate Resistor | $R_{Gint}$ | | | 2.5 | | Ω |
| Input Capacitance | $C_{ies}$ | $V_{CE}$=25V, $V_{GE}$=0V, f=1MHz, $T_{vj}$=25℃ | | 18.4 | | nF |
| Reverse Transfer Capacitance | $C_{res}$ | | | 0.9 | | nF |
| Gate-Emitter leakage current | $I_{GES}$ | $V_{CE}$=0V, $V_{GE}$=20V, $T_{vj}$=25℃ | | | 400 | nA |
| Turn-on Delay Time | $t_{d(on)}$ | $I_C$=300A<br>$V_{CE}$=600V<br>$V_{GE}$=±15V<br>$R_G$=2.4Ω<br>$T_{vj}$=25℃ | | 217 | | ns |
| Rise Time | $t_r$ | | | 80 | | ns |
| Turn-off Delay Time | $t_{d(off)}$ | | | 315 | | ns |
| Fall Time | $t_f$ | | | 171 | | ns |
| Energy Dissipation During Turn-on Time | $E_{on}$ | | | 37.1 | | mJ |
| Energy Dissipation During Turn-off Time | $E_{off}$ | | | 20.6 | | mJ |
| Turn-on Delay Time | $t_{d(on)}$ | $I_C$=300A<br>$V_{CE}$=600V<br>$V_{GE}$=±15V<br>$R_G$=2.4Ω<br>$T_{vj}$=150℃ | | 224 | | ns |
| Rise Time | $t_r$ | | | 90 | | ns |
| Turn-off Delay Time | $t_{d(off)}$ | | | 362 | | ns |
| Fall Time | $t_f$ | | | 248 | | ns |
| Energy Dissipation During Turn-on Time | $E_{on}$ | | | 48.9 | | mJ |
| Energy Dissipation During Turn-off Time | $E_{off}$ | | | 26.2 | | mJ |
| SC Data | $I_{sc}$ | $t_p$≤10us, $V_{GE}$=15V, $T_{vj}$=150℃, $V_{CC}$=900V, $V_{CEM}$≤1200V | | 1200 | | A |

## Diode

**Absolute Maximum Ratings**

| | Symbol | Conditions | Value | Unit |
|---|---|---|---|---|
| Repetitive Peak Reverse Voltage | $V_{RRM}$ | $T_{vj}$=25℃ | 1200 | V |
| Continuous DC Forward Current | $I_F$ | | 300 | A |
| Repetitive Peak Forward Current | $I_{FRM}$ | $t_p$=1ms | 600 | A |

**Characteristic Values**

| Parameter | Symbol | Conditions | Value | | | Unit |
|---|---|---|---|---|---|---|
| | | | Min. | Typ. | Max. | |
| Forward Voltage | $V_F$ | $I_F$=300A,$T_{vj}$=25℃ | | 1.95 | 2.80 | V |
| | | $I_F$=300A,$T_{vj}$=125℃ | | 1.80 | | |
| | | $I_F$=300A,$T_{vj}$=150℃ | | 1.75 | | |
| Recovered Charge | $Q_{rr}$ | $I_F$=300A<br>$V_R$=600V<br>-$di_F/dt$=3000A/us<br>$T_{vj}$=25℃ | | 17 | | uC |
| Peak Reverse Recovery Current | $I_{rr}$ | | | 97 | | A |
| Reverse Recovery Energy | $E_{rec}$ | | | 5.2 | | mJ |
| Recovered Charge | $Q_{rr}$ | $I_F$=300A<br>$V_R$=600V<br>-$di_F/dt$=3000A/us<br>$T_{vj}$=150℃ | | 47 | | uC |
| Peak Reverse Recovery Current | $I_{rr}$ | | | 157 | | A |
| Reverse Recovery Energy | $E_{rec}$ | | | 15.8 | | mJ |

## Module Characteristics

$T_C$=25°C unless otherwise specified

| Parameter | Symbol | Conditions | Value | | | Unit |
|---|---|---|---|---|---|---|
| | | | Min. | Typ. | Max. | |
| Isolation Voltage | $V_{isol}$ | t=1min,f=50Hz | 2500 | | | V |
| Maximum Junction Temperature | $T_{jmax}$ | | | | 175 | ℃ |
| Operating Junction Temperature | $T_{vj\ op}$ | | -40 | | 150 | ℃ |
| Storage Temperature | $T_{stg}$ | | -40 | | 125 | ℃ |
| Thermal Resistance Junction to Case | $R_{\theta JC}$ | per IGBT | | | 0.09 | K/W |
| | | per Diode | | | 0.16 | |
| Thermal Resistance Case to Sink | $R_{\theta CS}$ | Conductive grease applied | | 0.012 | 0.035 | K/W |
| Comparative Tracking Index | CTI | | 400 | | | |
| Module Electrodes Torque | $M_t$ | Recommended(M6) | 3.0 | | 5.0 | N·m |
| Module-to-Sink Torque | $M_s$ | Recommended(M6) | 3.0 | | 5.0 | N·m |
| Weight of Module | G | | | 315 | | g |

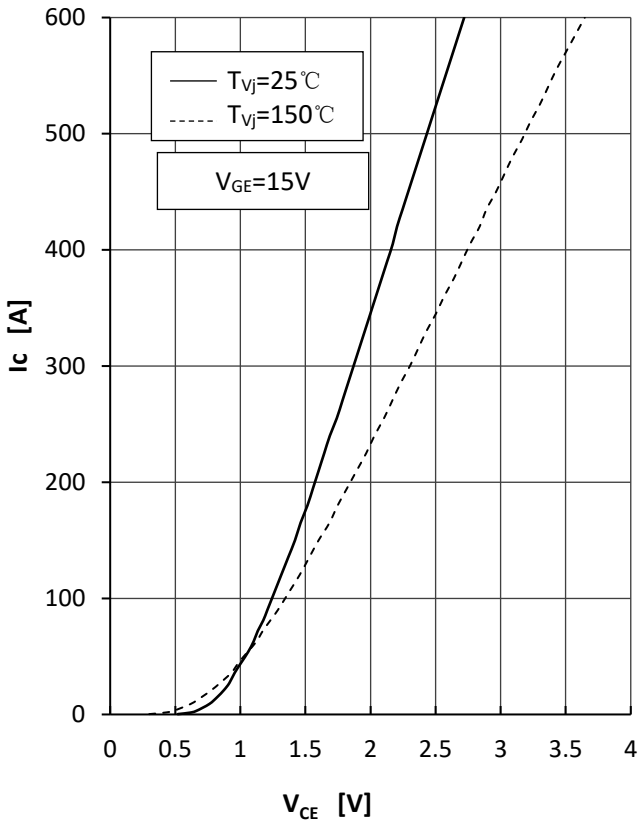

Fig1.IGBT Output Characteristics

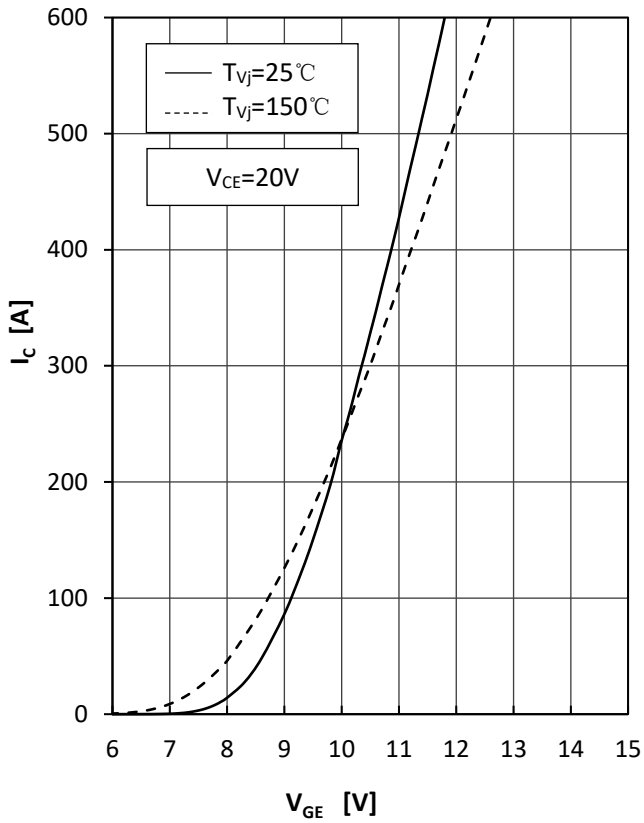

Fig2.IGBT Transfer Characteristics

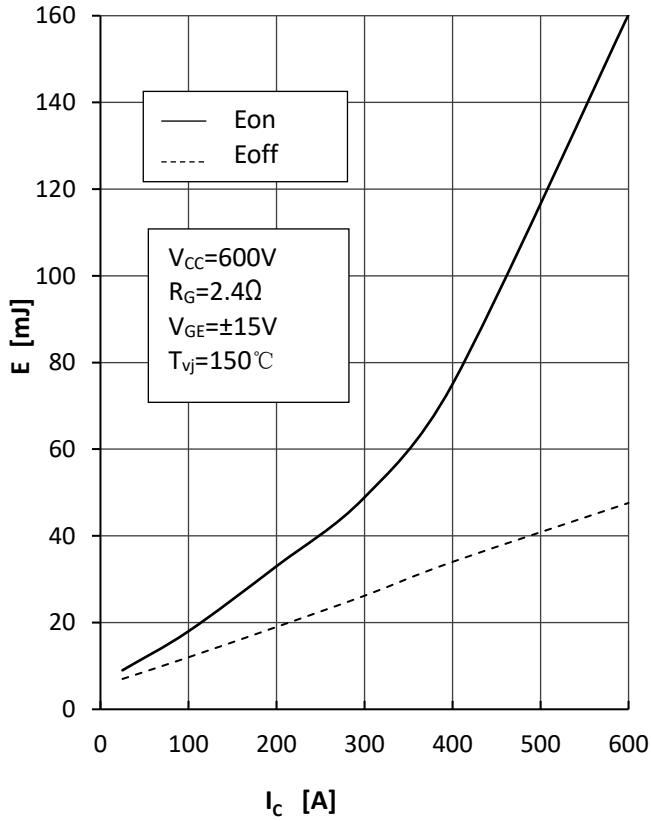

Fig3.IGBT Switching Loss vs.Ic

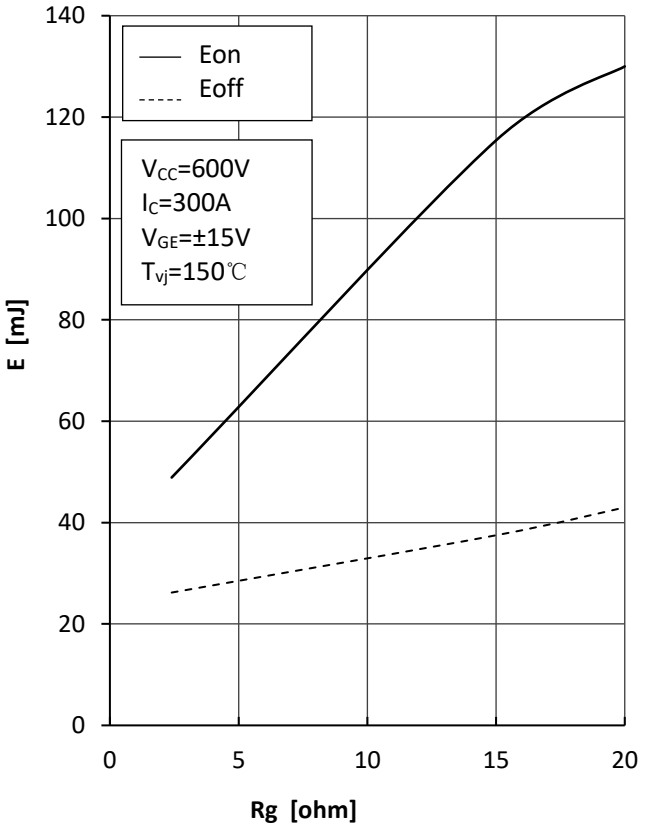

Fig4.IGBT Switching Loss vs.Rg

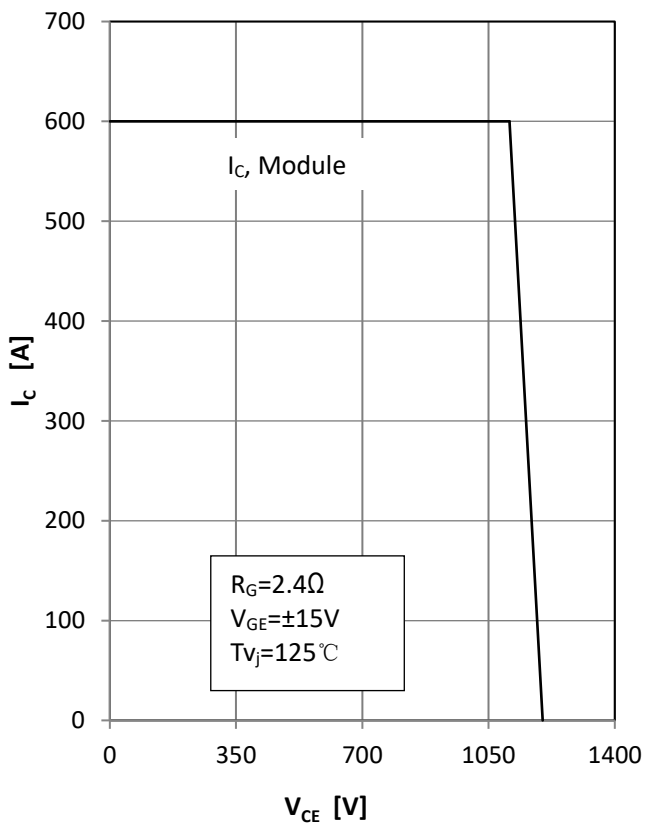


Fig5. RBSOA

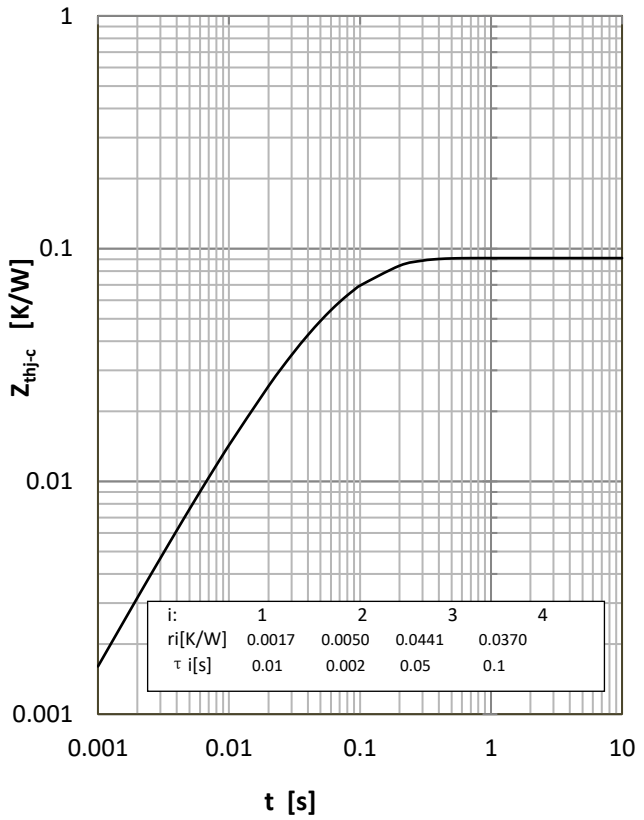


Fig 6. IGBT Transient Thermal Impedance

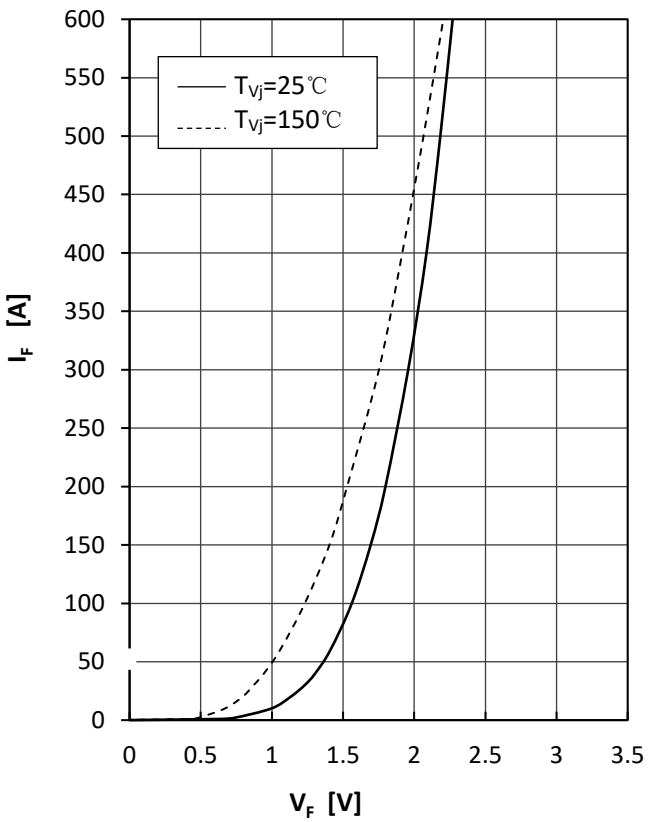


Fig5.Diode Foward Characteristics

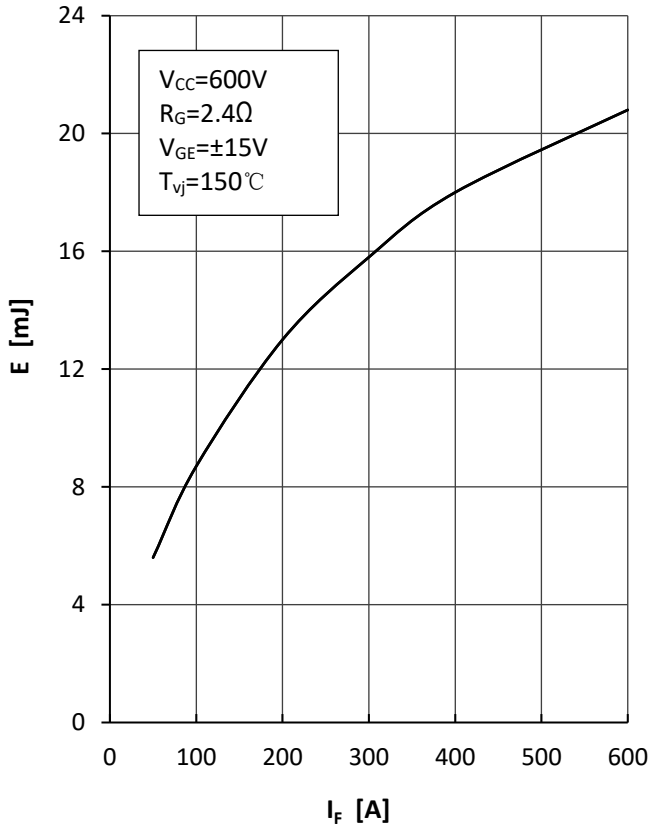


Fig6.Diode Switching Loss(Erec) vs.$I_F$

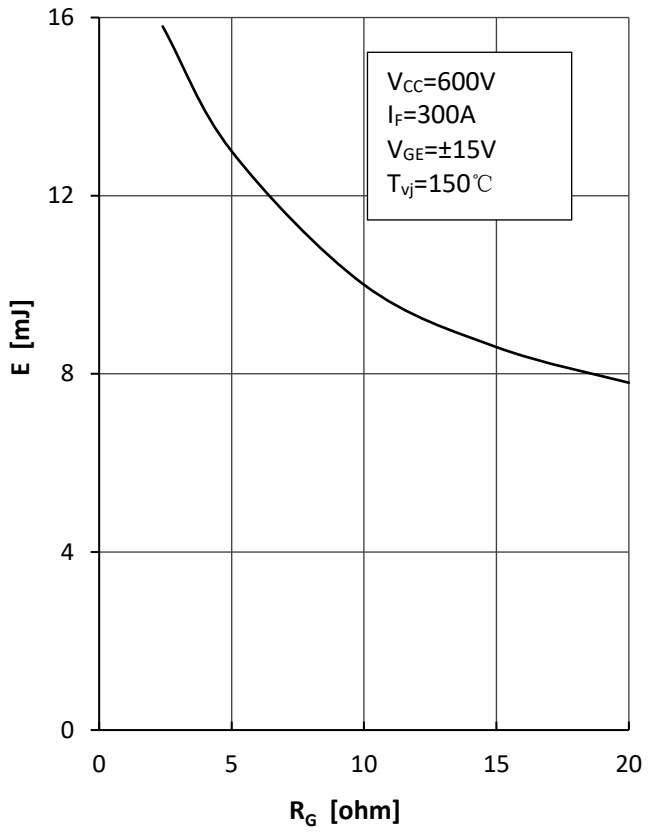


Fig9.Diode Switching Loss(Erec) vs.Rg

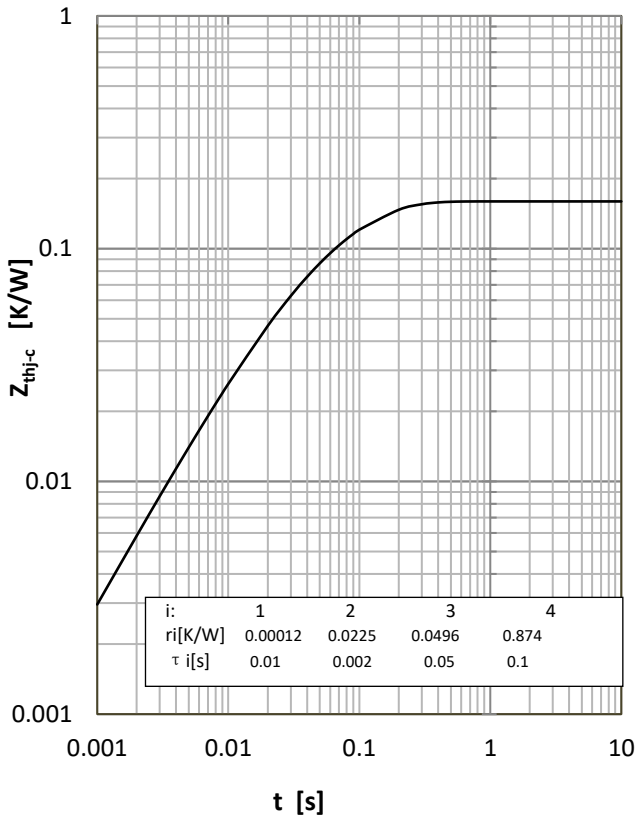


Fig10.Diode Transient Thermal Impedance

## Circuit Diagram

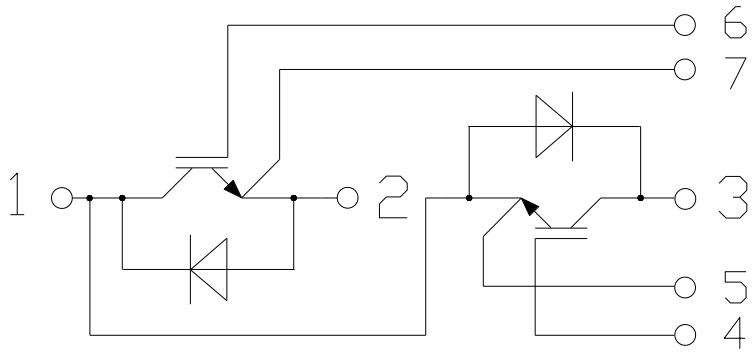


## Package Outline Information

Dimensions in Millimeters

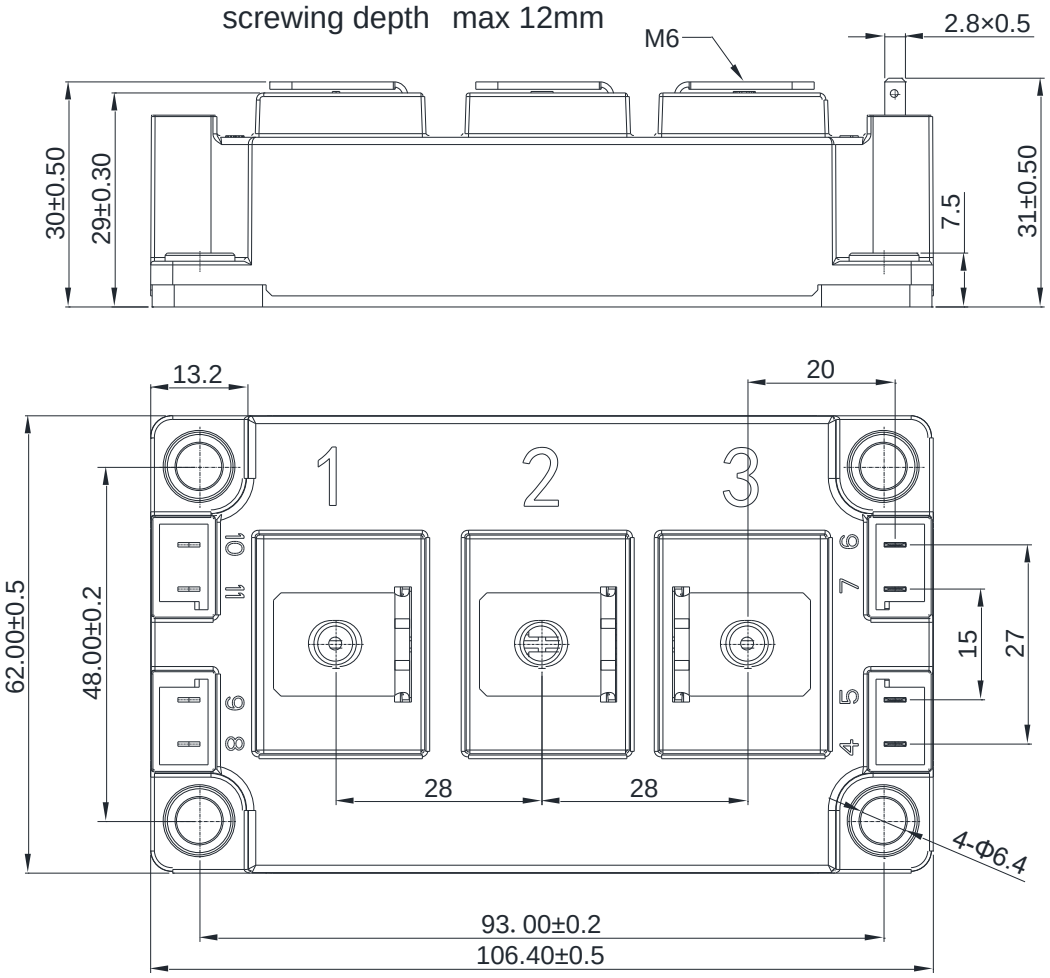

## Disclaimer

The information presented in this document is for reference only. Yangzhou Yangjie Electronic Technology Co., Ltd. reserves the right to make changes without notice for the specification of the products displayed herein to improve reliability, function or design or otherwise.

The data provided in this specification comes from professional testing equipment of Yangjie Electronic Laboratory, not general testing equipment. All the data is exclusively intended for technically trained staff. You and your technical departments will have to evaluate the suitability of the product for the intended application and the completeness of the product data with respect to such application.

The product listed herein is designed to be used with ordinary electronic equipment or devices, and not designed to be used with equipment or devices which require high level of reliability and the malfunction of with would directly endanger human life (such as aerospace machinery, nuclear-reactor controllers, fuel controllers and other safety devices), Yangjie or anyone on its behalf, assumes no responsibility or liability for any damages resulting from such improper use of sale.

IGBTs is the device which is sensitive to the static electricity, it is necessary to protect the device from being damaged by the static electricity when using it.

This publication supersedes & replaces all information previously supplied. For additional information, please visit our website http:// www.21yangjie.com , or consult your nearest Yangjie's sales office for further assistance.